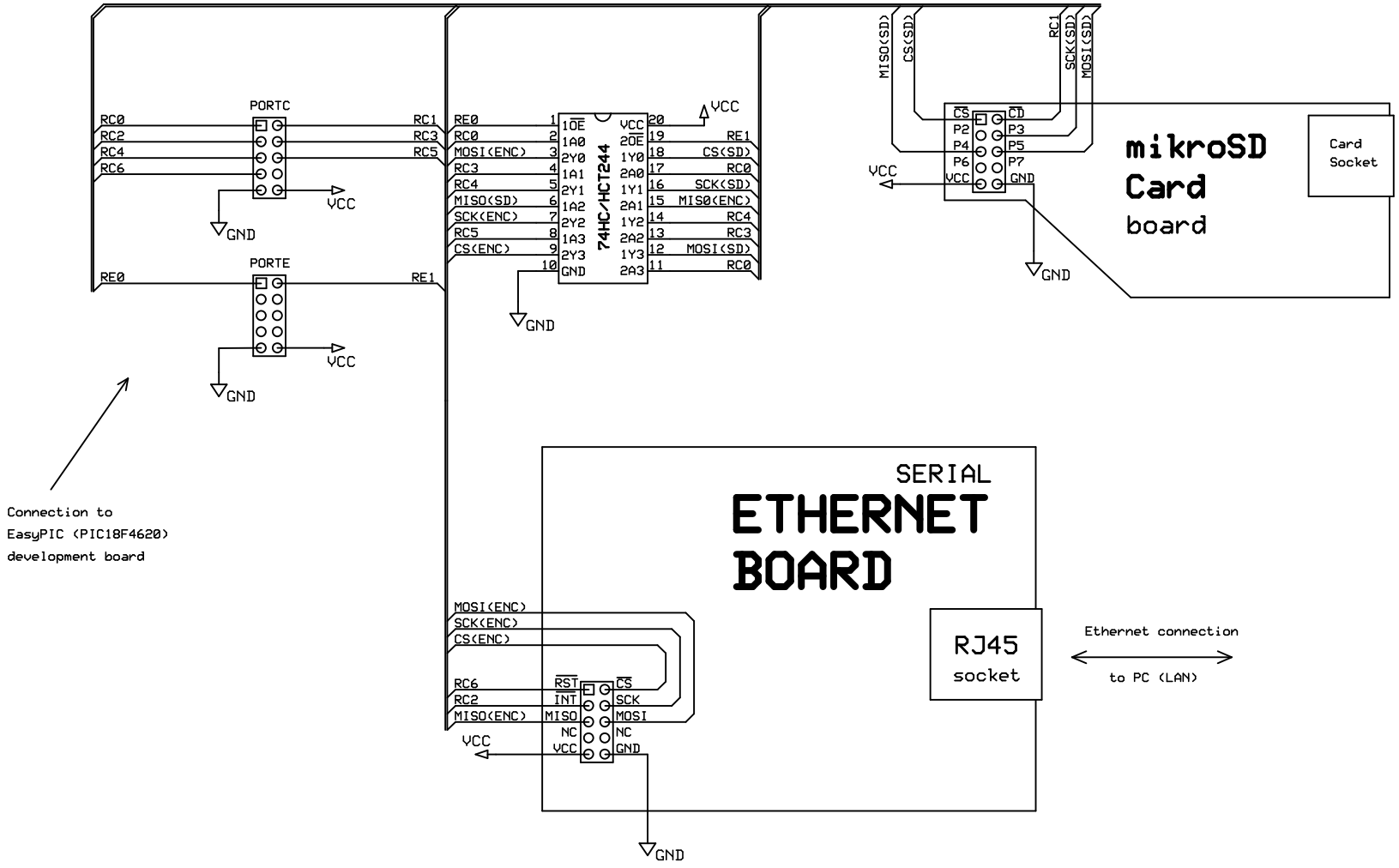

FTP Server with PIC18F4620		
Test schematic - connection to development board		
	Rev 1.0 15.8.2013	Page # 1